All PFA Flow meter for highly corrosive chemical
All PFA Chemical 유량계

Flow meter
FW-1720T

FW-1720T is the first all PFA flow meter, wetting part and taper tube are composed of PFA.
So, This flow meter is especially suited for all kinds of chemicals device due to superior chemical resistance and PFA welding.
국내 최초의 All PFA 유량계로 접액부와 Taper Tube가 PFA로 되어 있어 탁월한 내화학성과 PFA Welding으로 모든 종류의 Chemical 및 내화학성이 요구되는 장치에 적합한 소유량계입니다.

SPECIFICATIONS

- ▷ Measuring Object : Gas, Liquid (Bellow Viscosity 5.0cP)
- ▷ Range : Water 2CCM~2LPM at 1 atm 4℃
  Gas 50CCM~50LPM at 1 atm 0℃
- ▷ Accuracy : ± 3% Full Scale
- ▷ OP. Press : Max 5 kg/㎠
- ▷ OP. Temp : Max 70℃

- ▷ 적용유체 : 기체, 액체 (Viscosity ±5.0 이하)
- ▷ 측정범위 : Water 2CCM~2LPM at 1 atm 4℃
  Gas 50CCM~50LPM at 1 atm 0℃
- ▷ 측정오차 : ± 3% Full Scale
- ▷ 사용압력 : 최대 5 kg/㎠
- ▷ 사용온도 : 최대 70℃

FEATURES

- ▷ Simple design
- ▷ Particle Free, None Ion Contamination
- ▷ Superior chemical resistance
- ▷ Leak Free by PFA welding
- ▷ The most suitable for flow measurement and control of all kinds of chemicals
- ▷ Direct reading scale for flow rate
- ▷ Installed panel mounting
- ▷ Alarm for flow level sensor
- ▷ Cleaned ultrasonic DI Water & vacuum package in a clean dust free room.

- ▷ Simple한 구조
- ▷ Particle Free, None Ion Contamination
- ▷ 탁월한 내화학성
- ▷ PFA Welding 구조로 Leak Free
- ▷ HF 등 모든 Chemical의 유량측정 및 제어에 최적
- ▷ 100% 1대 1 유량 Calibration
- ▷ Panel Mounting 설치
- ▷ 유량 Level 감시용 Alarm 출력
- ▷ DI Water로 초음파 세정 및 진공포장

APPLICATIONS

- ▷ Provided chemical at semiconductor for wet process
- ▷ HF etching, flow measurement of cleaning equipment
- ▷ HF's flow measurement
- ▷ Unusable glass for chemical flow measurement
- ▷ Ultra pure & high purity chemical's flow measurement

- ▷ Wet process용 반도체 장비의 Chemical 공급라인
- ▷ HF etching, 세정 장비의 유량측정
- ▷ HF의 유량측정
- ▷ Glass를 사용할 수 없는 Chemical의 유량측정
- ▷ 초순수, 고순도 Chemical의 유량측정

DIMENSION

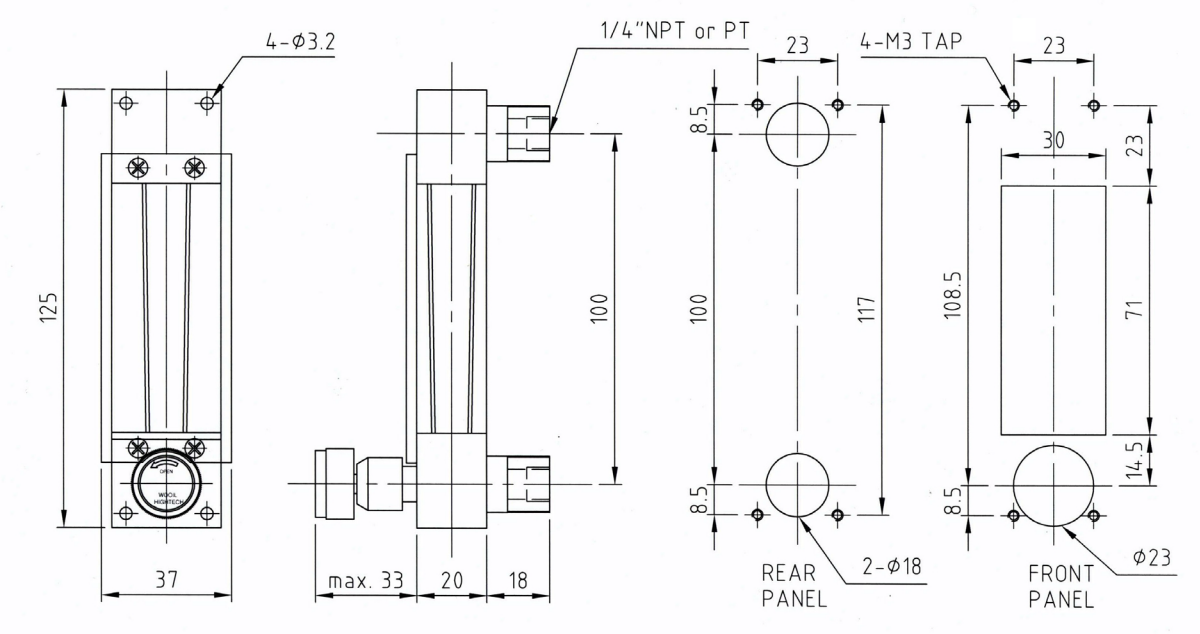

ORDERING INFORMATION

FW 1 7 2 0 T - □ □ - □ □ - □ □ - □

① ② ③ ④ ⑤ ⑥ ⑦

	①Valve	②Alarm	③Material	④Gasket	⑤Connection	⑥Size	⑦Application
FW1720T	O : None L : Inlet U : Outlet	O : None E : Optic Sensor	T : PFA	T : Teflon	R : PT Female T : Tube and Fitting (Standard)	1 : NPT 1/8" 2 : NPT 1/4" A : T.E Φ6.35 B : T.E Φ6.0 (Standard) C : T.E Φ8.0	S : Ultra Pure G : General

WOOIL HIGHTECH CO.,LTD. FLUCON

360, Maesan-Ri, Mohyun-Myun, Yongin city, Kyonngi-Do, 449-853, Korea
Tel 82-31-332-3037 Fax 82-31-332-3057
URL : www.flucon.net E-mail : wooilht@wooilht.co.kr